PAGE	405

BY	CHK	REVISION RECORD MODIFICATIONS	DATE	REV.
ALLEN		RELEASE TO PRODUCTION	2007,9,12	1.0

MATERIAL & FINISH
HOUSING: Glass Fiber, PBT. UL94V-0, BLACK
CONTACT: 0.35mm thickness phosphor bronze,
Gold plated over Nickel on contact area,
Tin plated over Nickel on solder area.

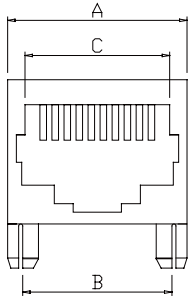

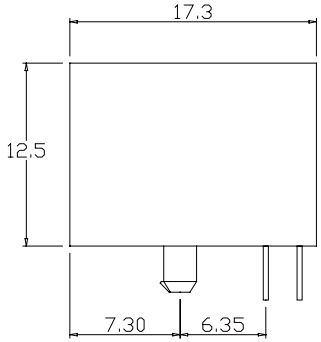

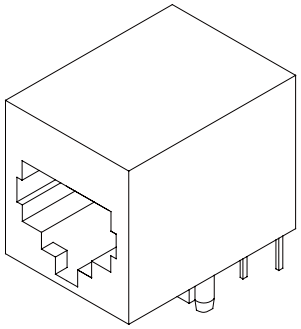

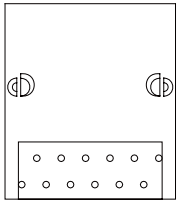

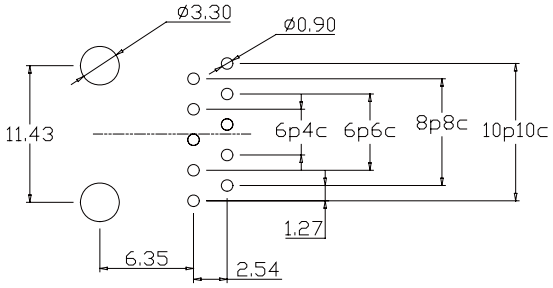

Recommended PCB Layout
(PCB TOLERANCE±0.05)

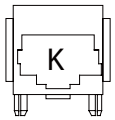

With keyway
(8P or 10P only)

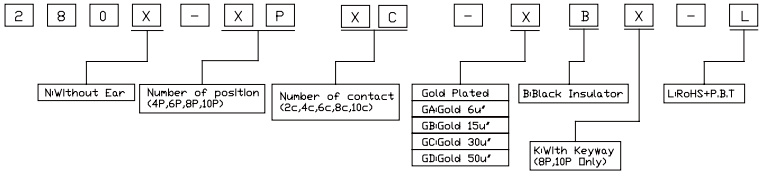

POSITION	CONTACT	A	B	C
4P	4C	15.00	11.43	7.80
6P	2C/4C/6C	15.00	11.43	9.90
8P	8C	15.00	11.43	11.90
10P	10C	15.00	11.43	11.90

APPRO	CHECK	DRAWN	PART NO.	280N-XPXC-XBX-L			DESCRIPTION
			ITEM NO.				
			DRAW NO.				
			UNIT	mm	SCALE	no	
			TOLER		NO.		

Tel: 0769 22020068 Fax: 0769 22020069 E-mail: sales@vigortec.com